Fig. 1: A/C Circuit

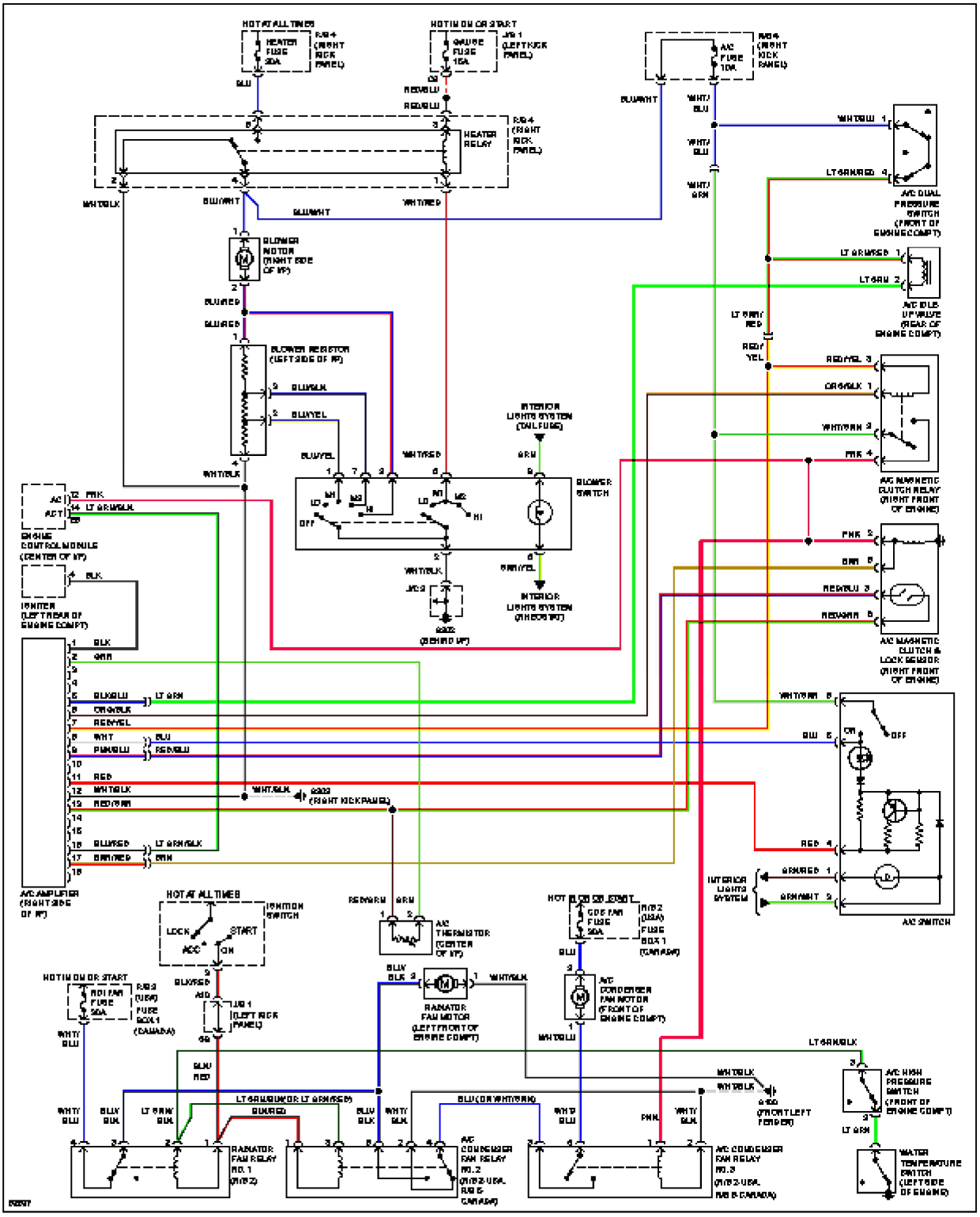

© 2005 Mitchell Repair Information Company, LLC.